2130 SHOWN CONNECTED AS 4 DIGITAL INPUTS AND 4 ANALOGUE INPUTS

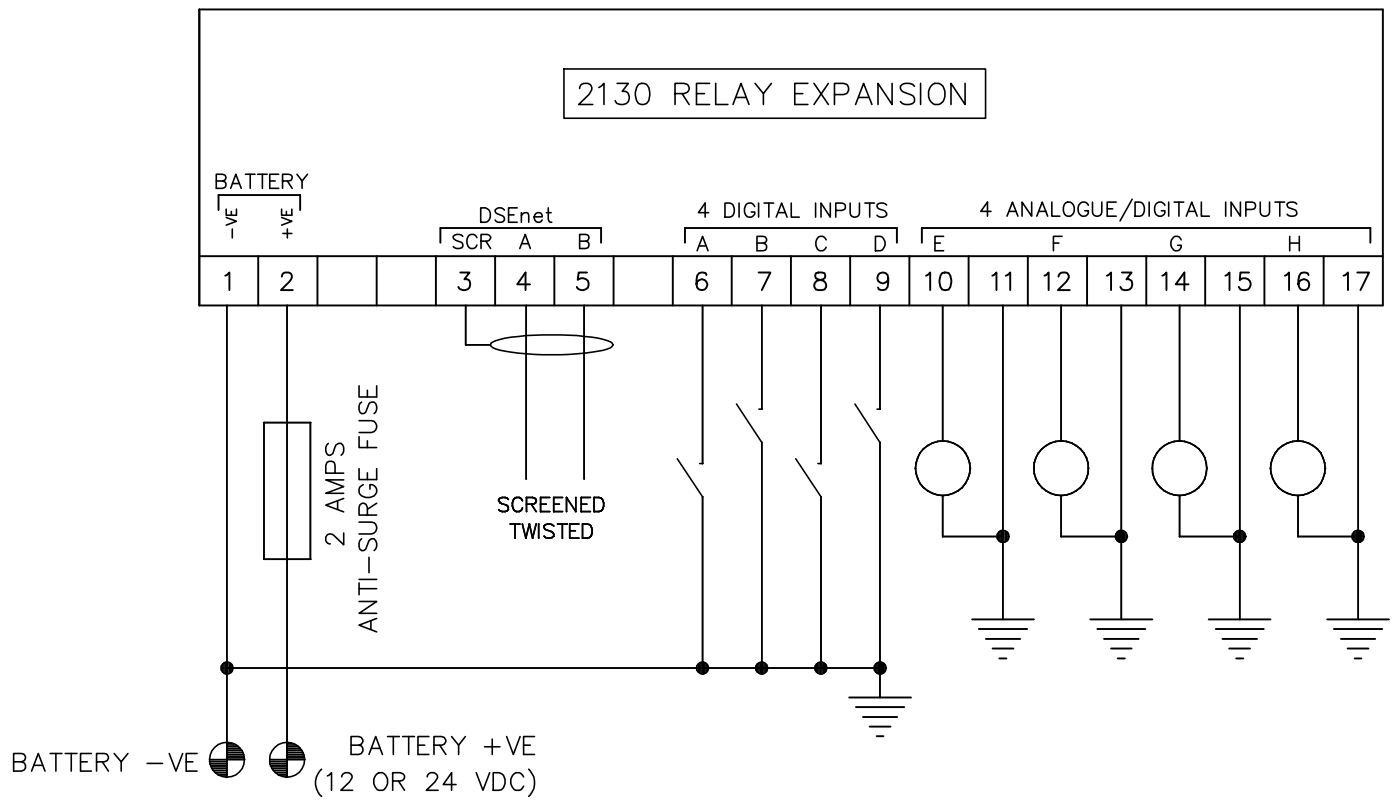

2130 SHOWN CONNECTED AS 8 DIGITAL INPUTS

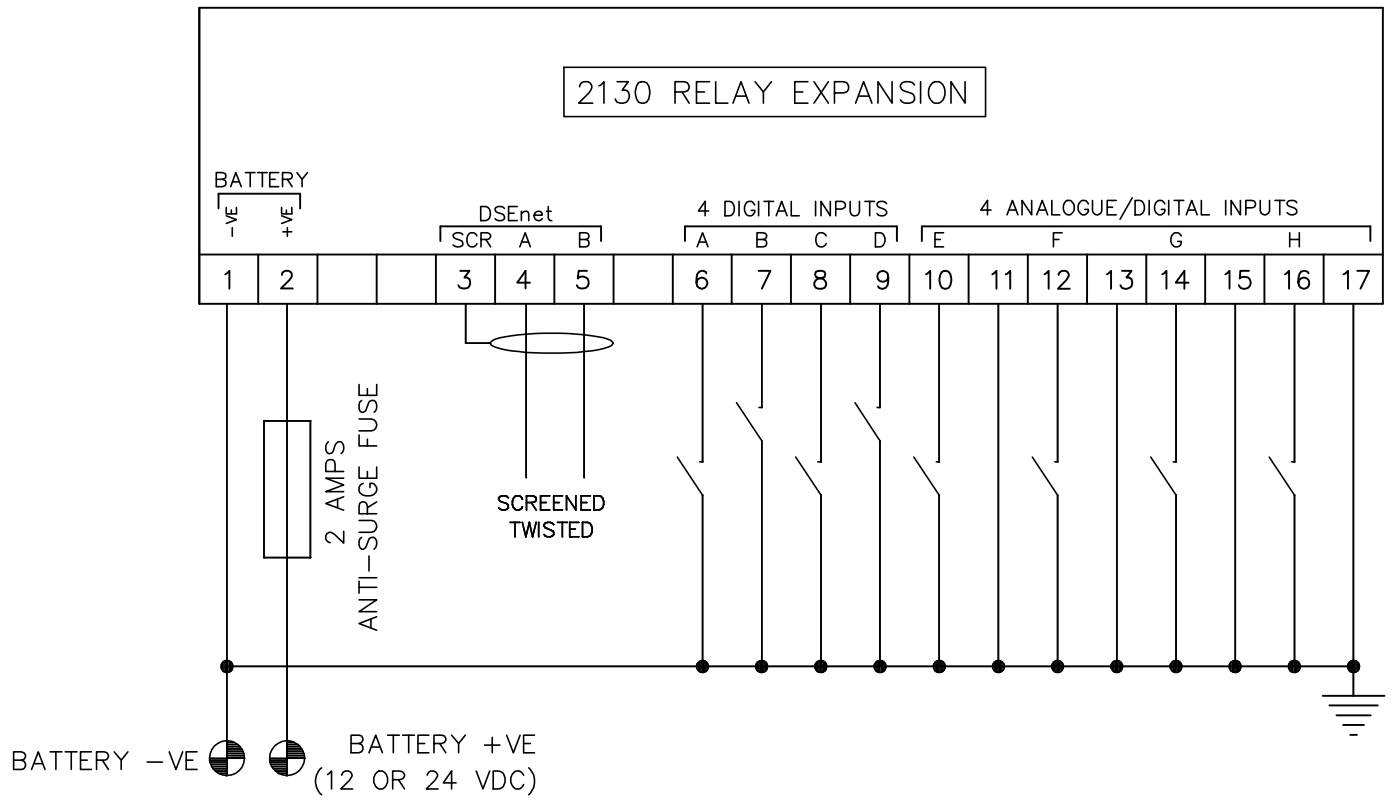

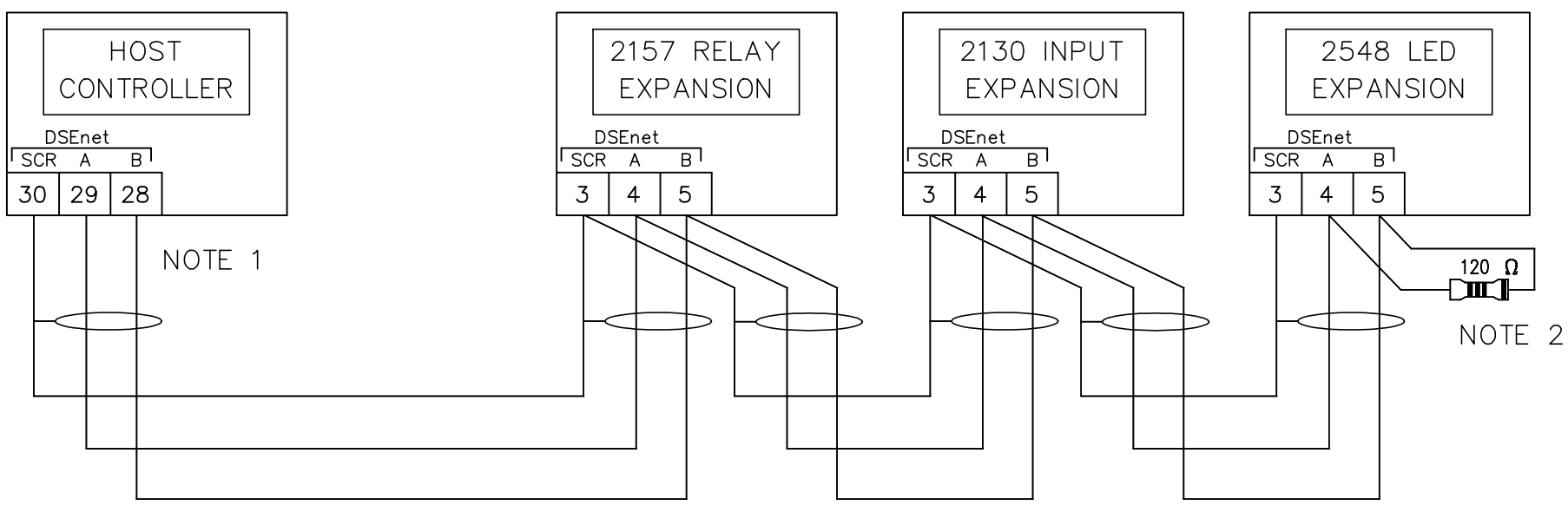

NOTE 1

AS A TERMINATING RESISTOR IS INTERNALLY FITTED TO THE HOST CONTROLLER, THE HOST CONTROLLER MUST BE THE FIRST UNIT ON THE DSEnet

NOTE 2

A 120 OHM TERMINATION RESISTOR MUST BE FITTED TO THE LAST UNIT ON THE DSEnet

UNITS = NA			DEEP SEA ELECTRONICS PLC HIGHFIELD HOUSE HUNMANBY INDUSTRIAL EST. N. YORKSHIRE, YO14 0PH
	JR	06/08/07	TITLE 2130 CONNECTIONS
TOLERANCE	REVISION	DATE	
NA	APP.		
	CHK.		DWG No. 035-087
	DRN. JR	24/07/07	SHEET 1/1