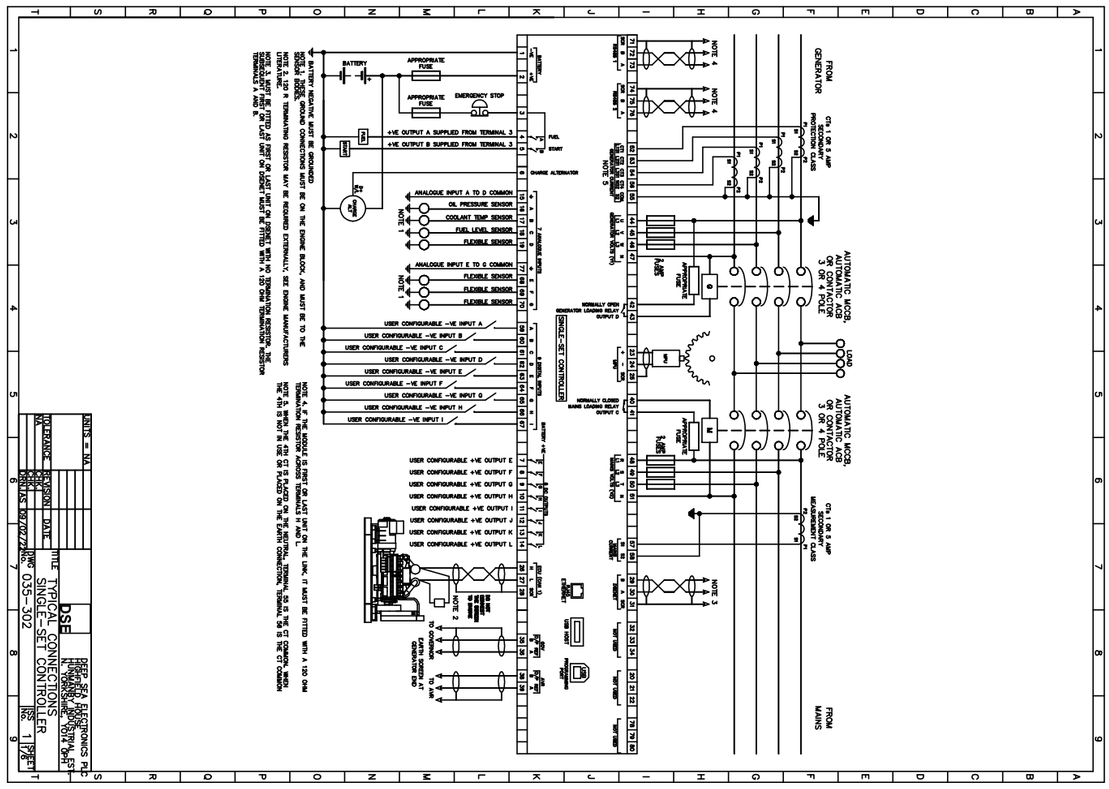
FROM GENERATOR
CTs 1 OR 5 AMP SECONDARY PROTECTION CLASS
AUTOMATIC MCCB, AUTOMATIC ACB OR CONTACTOR 3 OR 4 POLE
LOAD
FROM MAINS
CTs 1 OR 5 AMP SECONDARY MEASUREMENT CLASS
NOTE 4
NOTE 3
NOTE 5
NOTE 1
NOTE 2
APPROPRIATE FUSE
NORMALLY OPEN GENERATOR LOADING RELAY OUTPUT D
NORMALLY CLOSED MAINS LOADING RELAY OUTPUT C
SINGLE-SET CONTROLLER
BATTERY
EMERGENCY STOP
+VE OUTPUT A SUPPLIED FROM TERMINAL 3
+VE OUTPUT B SUPPLIED FROM TERMINAL 3
FUEL
START
CHARGE ALTERNATOR
ANALOGUE INPUT A TO D COMMON
OIL PRESSURE SENSOR
COOLANT TEMP SENSOR
FUEL LEVEL SENSOR
FLEXIBLE SENSOR
ANALOGUE INPUT E TO G COMMON
USER CONFIGURABLE -VE INPUT A
USER CONFIGURABLE -VE INPUT B
USER CONFIGURABLE -VE INPUT C
USER CONFIGURABLE -VE INPUT D
USER CONFIGURABLE -VE INPUT E
USER CONFIGURABLE -VE INPUT F
USER CONFIGURABLE -VE INPUT G
USER CONFIGURABLE -VE INPUT H
USER CONFIGURABLE -VE INPUT I
USER CONFIGURABLE +VE OUTPUT E
USER CONFIGURABLE +VE OUTPUT F
USER CONFIGURABLE +VE OUTPUT G
USER CONFIGURABLE +VE OUTPUT H
USER CONFIGURABLE +VE OUTPUT I
USER CONFIGURABLE +VE OUTPUT J
USER CONFIGURABLE +VE OUTPUT K
USER CONFIGURABLE +VE OUTPUT L
USB HOST
USB SLAVE
CAN PORT
RS485 PORT
RS232 PORT
CAN PORT
CAN PORT
CAN