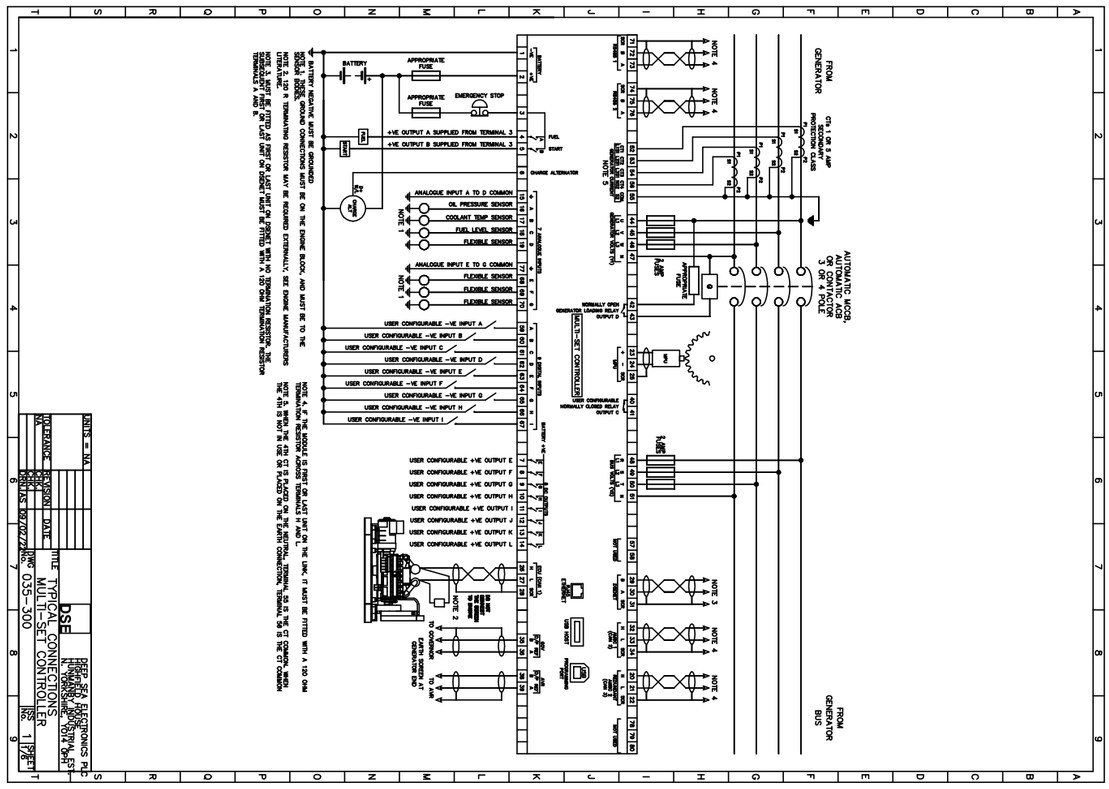
FROM GENERATOR
CTs 1 OR 5 AMP SECONDARY PROTECTION CLASS
AUTOMATIC MCCB, AUTOMATIC ACB OR CONTACTOR 3 OR 4 POLE
FROM GENERATOR BUS
NOTE 4
NOTE 3
NOTE 5
APPROPRIATE FUSE
NORMALLY OPEN GENERATOR LOADING RELAY OUTPUT D
MULTI-SET CONTROLLER
USER CONFIGURABLE NORMALLY CLOSED RELAY OUTPUT C
BATTERY
APPROPRIATE FUSE
EMERGENCY STOP
+VE OUTPUT A SUPPLIED FROM TERMINAL 3
+VE OUTPUT B SUPPLIED FROM TERMINAL 3
FUEL
START
CHARGE ALTERNATOR
ANALOGUE INPUT A TO D COMMON
OIL PRESSURE SENSOR
COOLANT TEMP SENSOR
FUEL LEVEL SENSOR
FLEXIBLE SENSOR
ANALOGUE INPUT E TO G COMMON
FLEXIBLE SENSOR
FLEXIBLE SENSOR
FLEXIBLE SENSOR
NOTE 1
USER CONFIGURABLE -VE INPUT A
USER CONFIGURABLE -VE INPUT B
USER CONFIGURABLE -VE INPUT C
USER CONFIGURABLE -VE INPUT D
USER CONFIGURABLE -VE INPUT E
USER CONFIGURABLE -VE INPUT F
USER CONFIGURABLE -VE INPUT G
USER CONFIGURABLE -VE INPUT H
USER CONFIGURABLE -VE INPUT I
USER CONFIGURABLE +VE OUTPUT E
USER CONFIGURABLE +VE OUTPUT F
USER CONFIGURABLE +VE OUTPUT G
USER CONFIGURABLE +VE OUTPUT H
USER CONFIGURABLE +VE OUTPUT I
USER CONFIGURABLE +VE OUTPUT J
USER CONFIGURABLE +VE OUTPUT K
USER CONFIGURABLE +VE OUTPUT L
USB HOST
USB DEVICE
NOTE 2
TO GOVERNOR
TO AVR
CAN'T SCREW LAT GENERATOR END
BATTERY NEGATIVE MUST BE GROUNDED
ANALOGUE SENSOR COMMON
NOTE 2 GROUND CONNECTIONS MUST BE ON THE ENGINE BLOCK, AND MUST BE TO THE SENSOR BODY.
NOTE 3 A TERMINATING RESISTOR MAY BE REQUIRED EXTERNALLY. SEE ENGINE MANUFACTURERS LITERATURE.
NOTE 4 IF THE MODULE IS FIRST OR LAST UNIT ON THE LINK, IT MUST BE FITTED WITH A 120 OHM TERMINATION RESISTOR ACROSS TERMINALS H AND L.
NOTE 5 IF THE MODULE IS FIRST OR LAST UNIT ON PANELS WITH NO TERMINATION RESISTOR, THE TERMINATION RESISTOR MUST BE FITTED AT FIRST OR LAST UNIT ON PANELS WITH A 120 OHM TERMINATION RESISTOR.
NOTE 6 IF THE MODULE IS FIRST OR LAST UNIT ON A SINGLE BUS, THE CAN COMMON SHOULD BE TERMINATED WITH A 120 OHM RESISTOR ACROSS TERMINALS Y AND Z.
UNITS = MM
TOLERANCE NA
REVISION
DATE
DRAWN BY
CHECKED BY
APPROVED BY
DATE 30/07/07
DSE
DEEP SEA ELECTRONICS PLC
HOOLEY WOOD, WESTON-SUPER-MARE, NORTH SOMERSET, BS24 9AT, ENGLAND
TITLE TYPICAL CONNECTIONS MULTI-SET CONTROLLER
DWG No. 035-300
ISS. 1
SHEET No. 1 OF 8

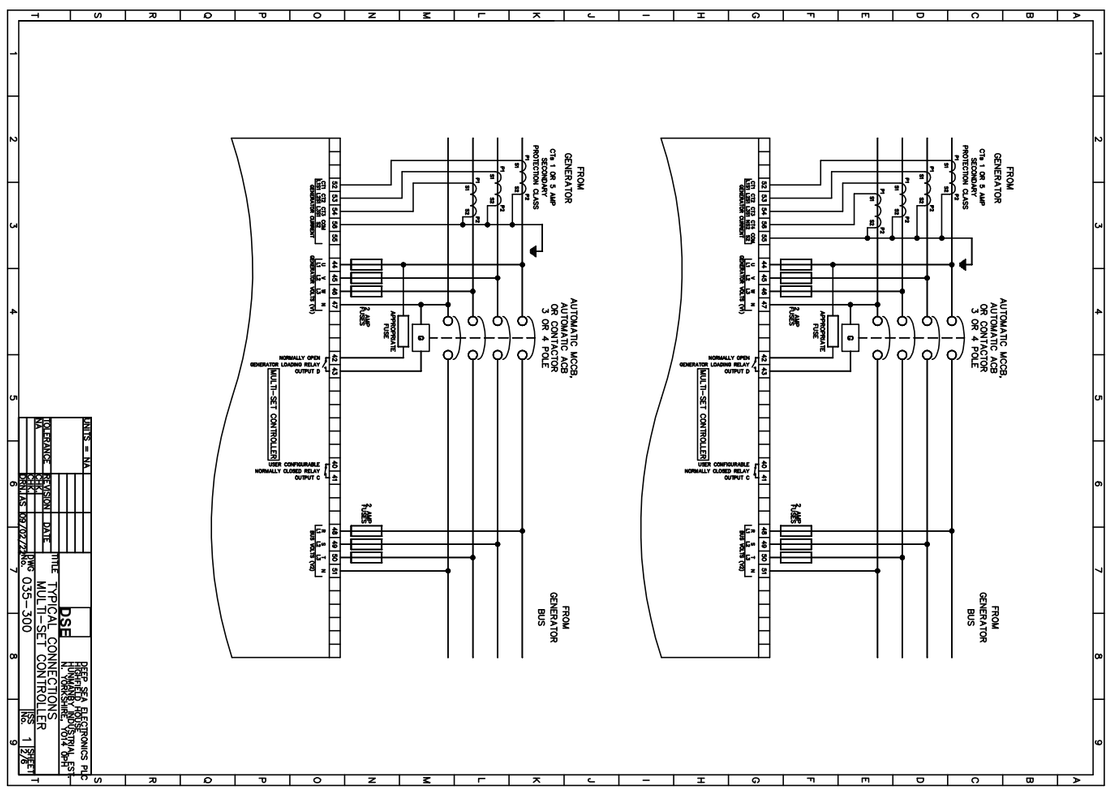
FROM GENERATOR
CTs 1 OR 5 AMP SECONDARY PROTECTION CLASS
AUTOMATIC MCCB, AUTOMATIC ACB OR CONTACTOR 3 OR 4 POLE
FROM GENERATOR BUS
APPROPRIATE FUSE
NORMALLY OPEN GENERATOR LOADING RELAY OUTPUT D
MULTI-SET CONTROLLER
USER CONFIGURABLE NORMALLY CLOSED RELAY OUTPUT C
UNITS = MM
TOLERANCE NA
REVISION
DATE
DRAWN BY
CHECKED BY
APPROVED BY
DATE 30/07/07
DSE
DEEP SEA ELECTRONICS PLC
HOOLEY WOOD, WESTON-SUPER-MARE, NORTH SOMERSET, BS24 9AT, ENGLAND
TITLE TYPICAL CONNECTIONS MULTI-SET CONTROLLER
DWG No. 035-300
ISS. 1
SHEET No. 2 OF 8

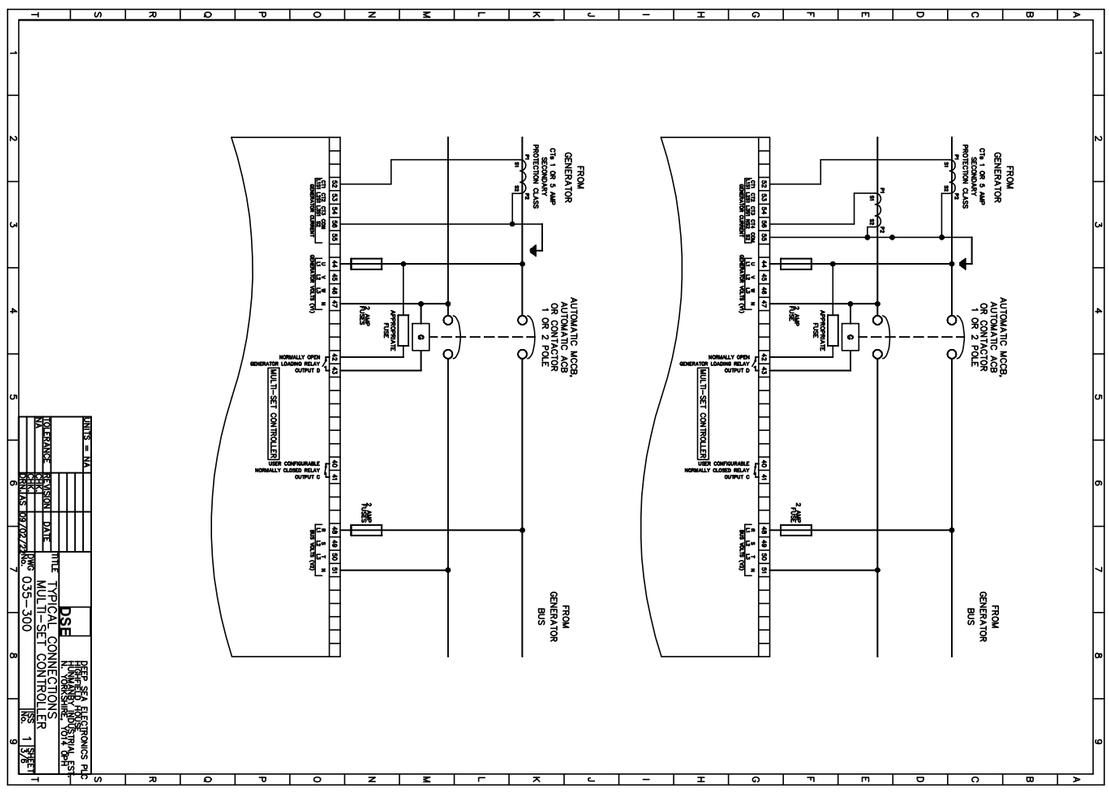
FROM GENERATOR
CTs 1 OR 5 AMP SECONDARY PROTECTION CLASS
AUTOMATIC MCCB, AUTOMATIC ACB OR CONTACTOR 1 OR 2 POLE
FROM GENERATOR BUS
APPROPRIATE FUSE
NORMALLY OPEN GENERATOR LOADING RELAY OUTPUT D
MULTI-SET CONTROLLER
USER CONFIGURABLE NORMALLY CLOSED RELAY OUTPUT C
UNITS = MM
TOLERANCE NA
REVISION
DATE
DRAWN BY
CHECKED BY
APPROVED BY
DATE 30/07/07
DSE
DEEP SEA ELECTRONICS PLC
HOOLEY WOOD, WESTON-SUPER-MARE, NORTH SOMERSET, BS24 9AT, ENGLAND
TITLE TYPICAL CONNECTIONS MULTI-SET CONTROLLER
DWG No. 035-300
ISS. 1
SHEET No. 3 OF 8