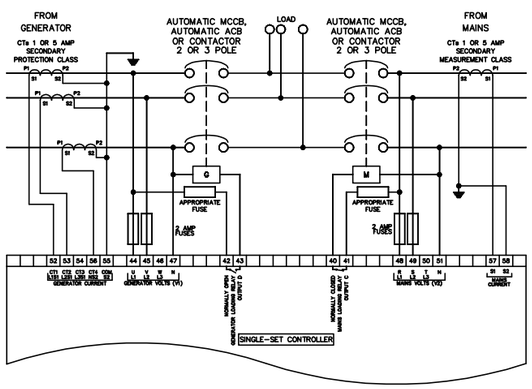

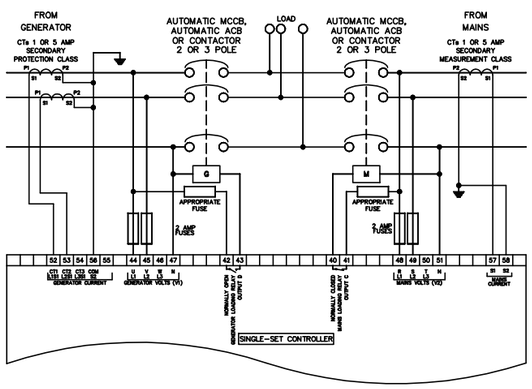

UNITS = NA

DSE

DEEP SEA ELECTRONICS PLC
DISHFIELD ROAD,
HUNMANBY INDUSTRIAL EST,
N. YORKSHIRE, YO14 0PH

TOLERANCE	REVISION	DATE
NA	CHK1	
	CHK2 JR	28/01/22
	DRN TAS	27/01/22

TITLE TYPICAL CONNECTIONS SINGLE-SET CONTROLLER

DWG No. 035-294

ISS No. 1

SHEET No. 1 of 8

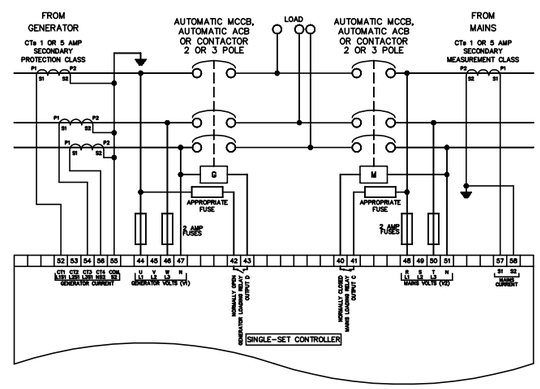

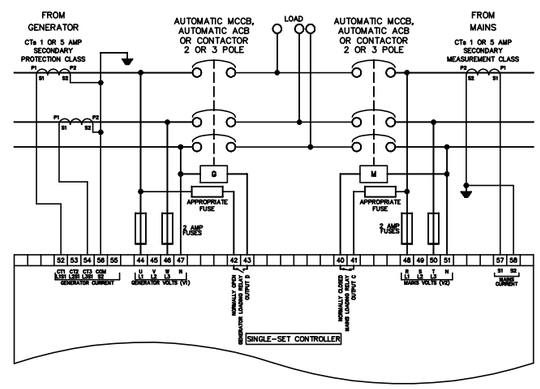

UNITS = NA

DSE

DEEP SEA ELECTRONICS PLC
DISHFIELD ROAD,
HUNMANBY INDUSTRIAL EST,
N. YORKSHIRE, YO14 0PH

TOLERANCE	REVISION	DATE
NA	CHK1	
	CHK2 JR	28/01/22
	DRN TAS	27/01/22

TITLE TYPICAL CONNECTIONS SINGLE-SET CONTROLLER

DWG No. 035-294

ISS No. 1

SHEET No. 1 of 8

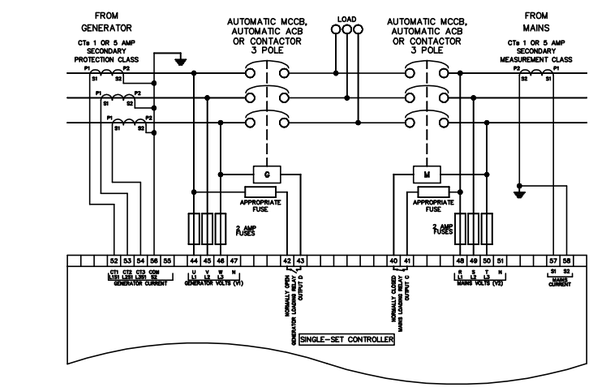

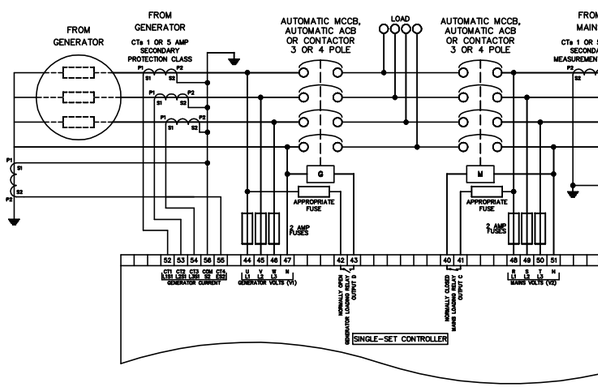

UNITS = NA

DSE

DEEP SEA ELECTRONICS PLC
DISHFIELD ROAD,
HUNMANBY INDUSTRIAL EST,
N. YORKSHIRE, YO14 0PH

TOLERANCE	REVISION	DATE
NA	CHK1	
	CHK2 JR	28/01/22
	DRN TAS	27/01/22

TITLE TYPICAL CONNECTIONS SINGLE-SET CONTROLLER

DWG No. 035-294

ISS No. 1

SHEET No. 1 of 8