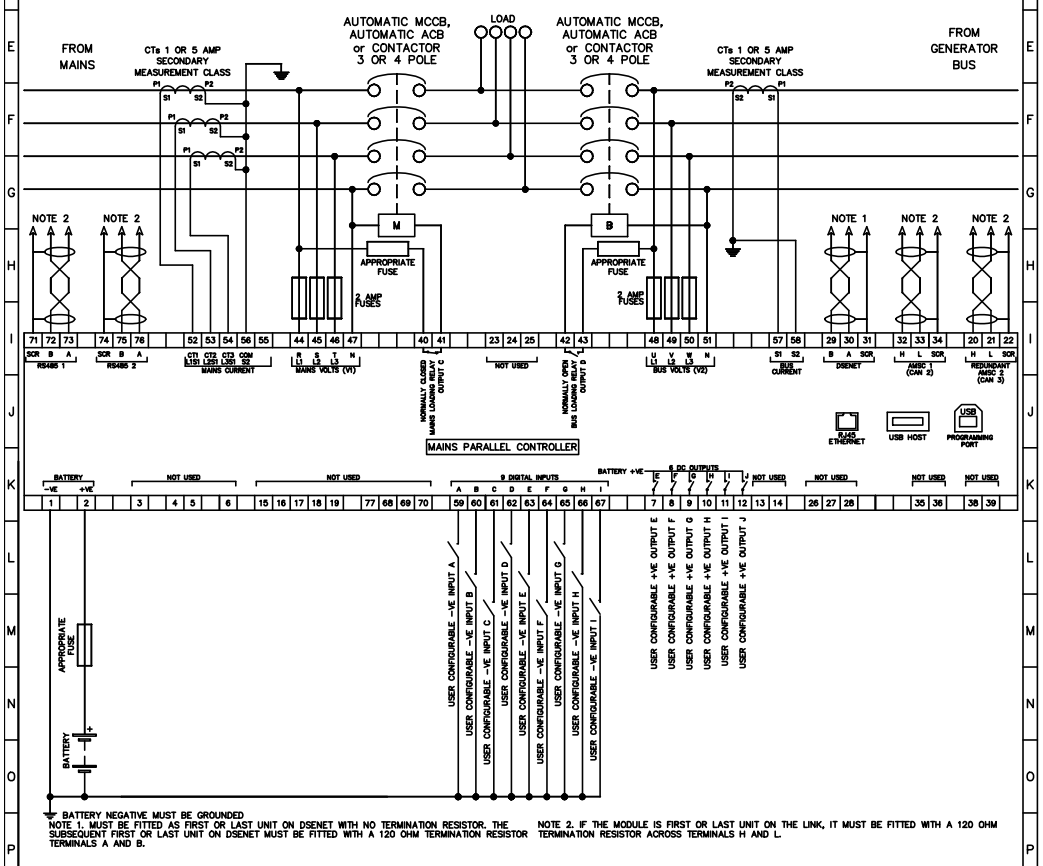

BATTERY NEGATIVE MUST BE GROUNDED

NOTE 1. MUST BE FITTED AS FIRST OR LAST UNIT ON DSENET WITH NO TERMINATION RESISTOR. THE SUBSEQUENT FIRST OR LAST UNIT ON DSENET MUST BE FITTED WITH A 120 OHM TERMINATION RESISTOR TERMINALS A AND B.

NOTE 2. IF THE MODULE IS FIRST OR LAST UNIT ON THE LINK, IT MUST BE FITTED WITH A 120 OHM TERMINATION RESISTOR ACROSS TERMINALS H AND L.

UNITS = NA			DSE — DEEP SEA ELECTRONICS PLC, HIGHFIELD HOUSE, HUNMANBY INDUSTRIAL EST., N. YORKSHIRE, YO14 0PH
TOLERANCE NA	REVISION AS	DATE 18/03/22	TITLE TYPICAL CONNECTIONS MAINS PARALLEL CONTROLLER
	CHK.JR	26/01/21	DWG No. 035-295
	DRN.JAS	19/01/21	ISS No. 2 SHEET 1/5

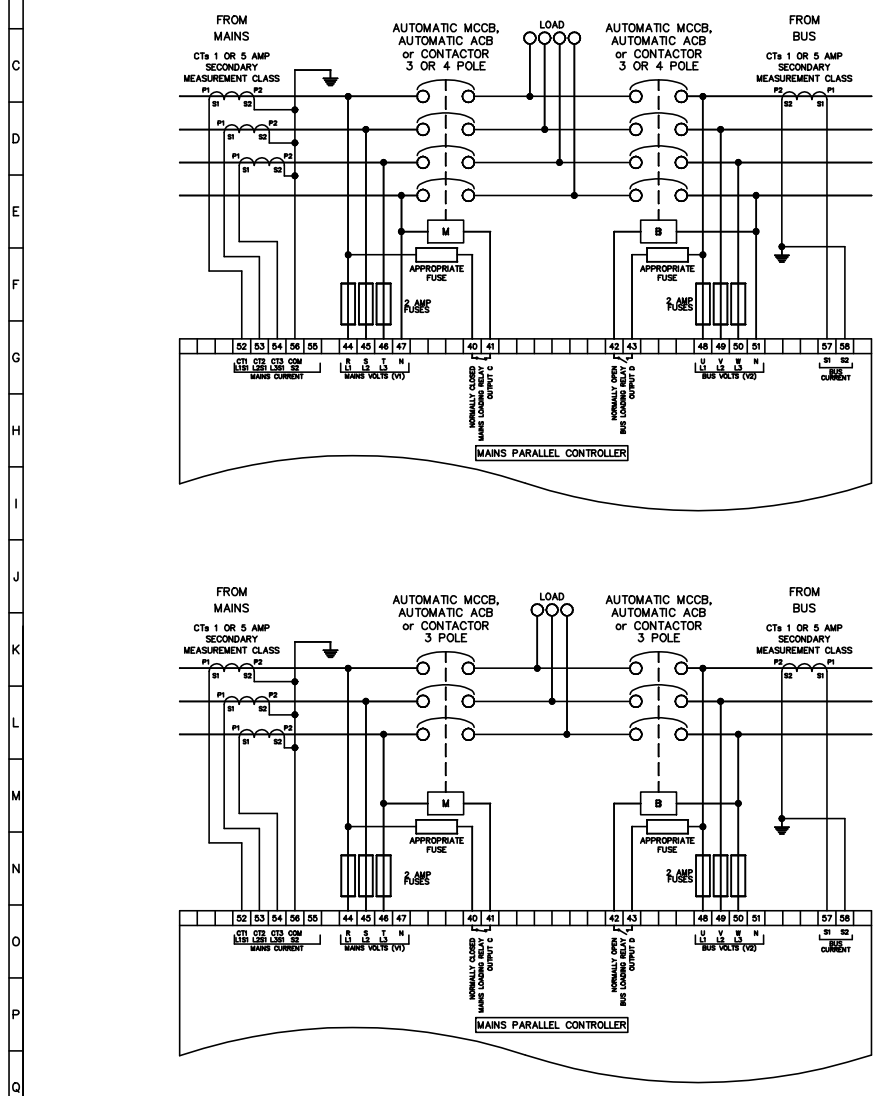

UNITS = NA			DSE — DEEP SEA ELECTRONICS PLC, HIGHFIELD HOUSE, HUNMANBY INDUSTRIAL EST., N. YORKSHIRE, YO14 0PH
TOLERANCE NA	REVISION	DATE	TITLE TYPICAL CONNECTIONS MAINS PARALLEL CONTROLLER
	CHK.JR	28/01/21	DWG No. 035-295
	DRN.JAS	27/01/21	ISS No. 1 SHEET 2/5

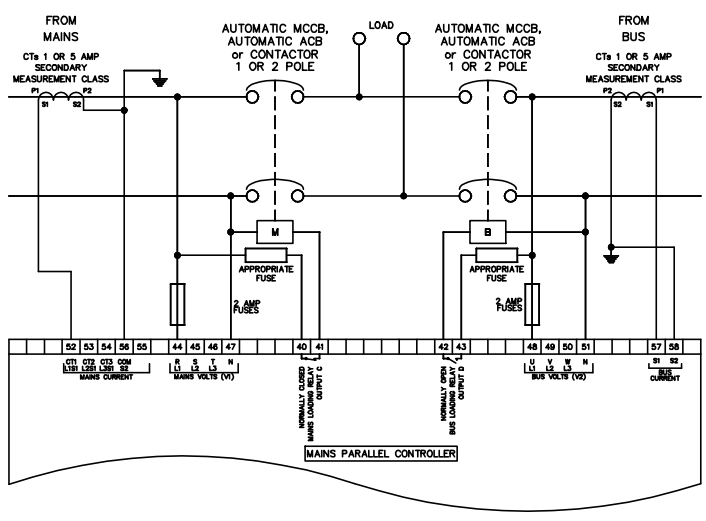

UNITS = NA			DSE — DEEP SEA ELECTRONICS PLC, HIGHFIELD HOUSE, HUNMANBY INDUSTRIAL EST., N. YORKSHIRE, YO14 0PH
TOLERANCE NA	REVISION	DATE	TITLE TYPICAL CONNECTIONS MAINS PARALLEL CONTROLLER
	CHK.JR	28/01/21	DWG No. 035-295
	DRN.JAS	27/01/21	ISS No. 1 SHEET 4/5

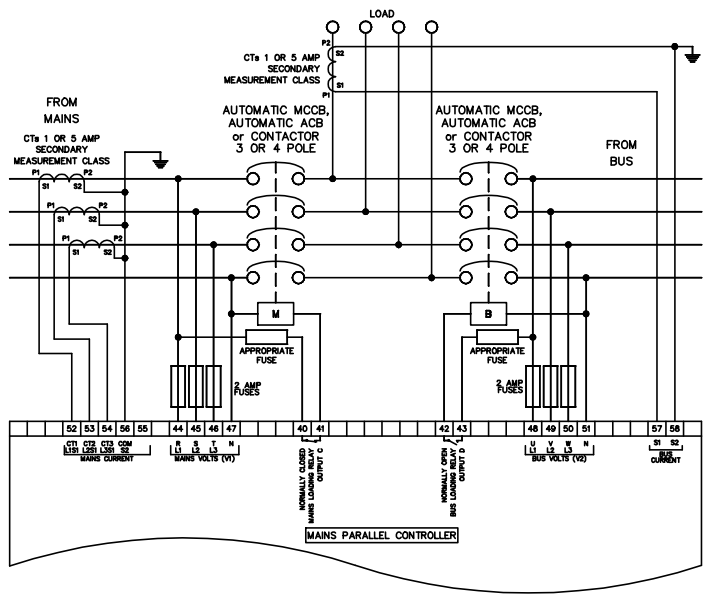

UNITS = NA			DSE — DEEP SEA ELECTRONICS PLC, HIGHFIELD HOUSE, HUNMANBY INDUSTRIAL EST., N. YORKSHIRE, YO14 0PH
TOLERANCE NA	REVISION	DATE	TITLE TYPICAL CONNECTIONS MAINS PARALLEL CONTROLLER
	CHK.JR	28/01/21	DWG No. 035-295
	DRN.JAS	27/01/21	ISS No. 1 SHEET 5/5