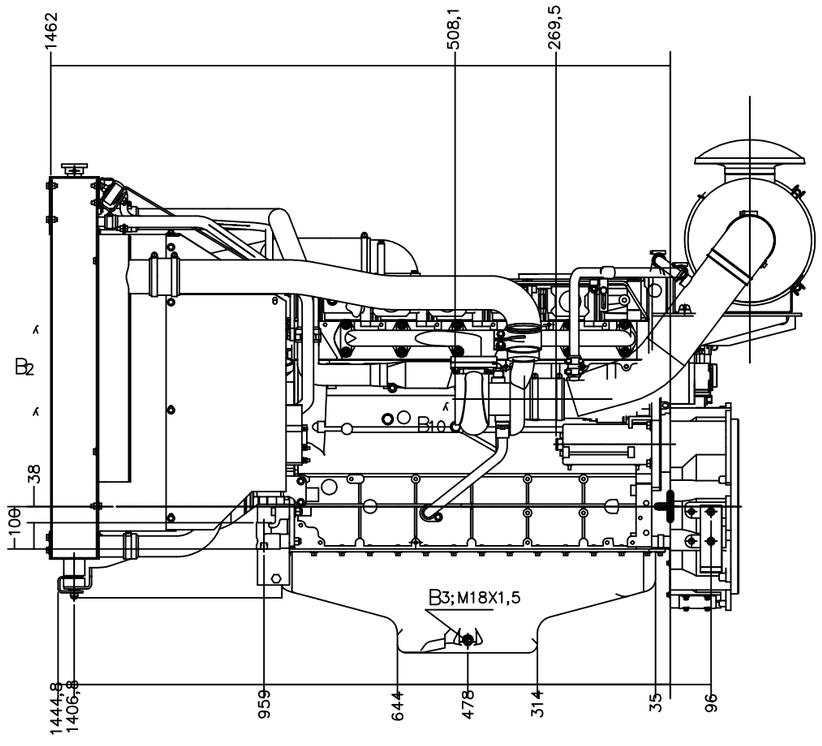


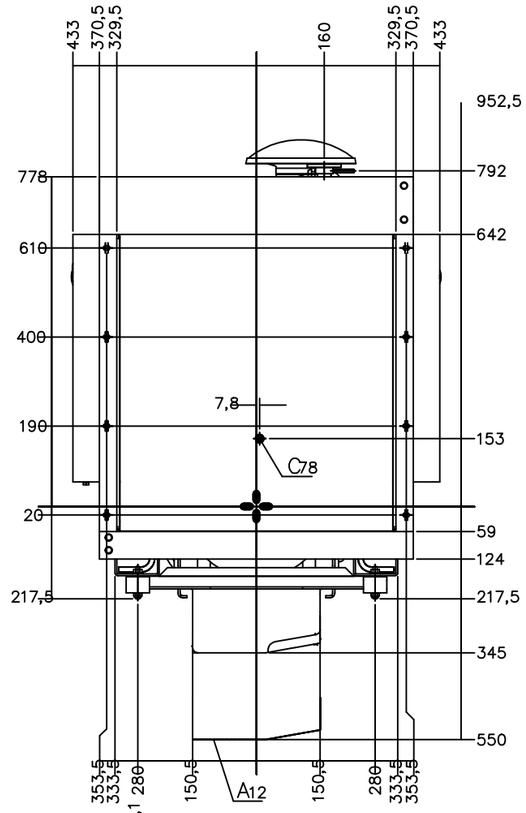


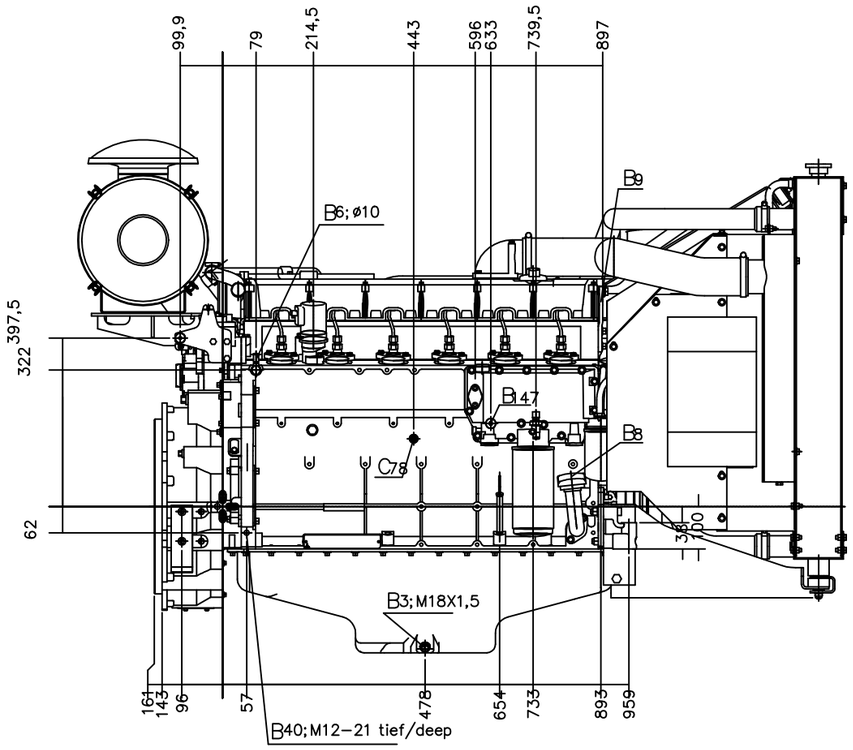


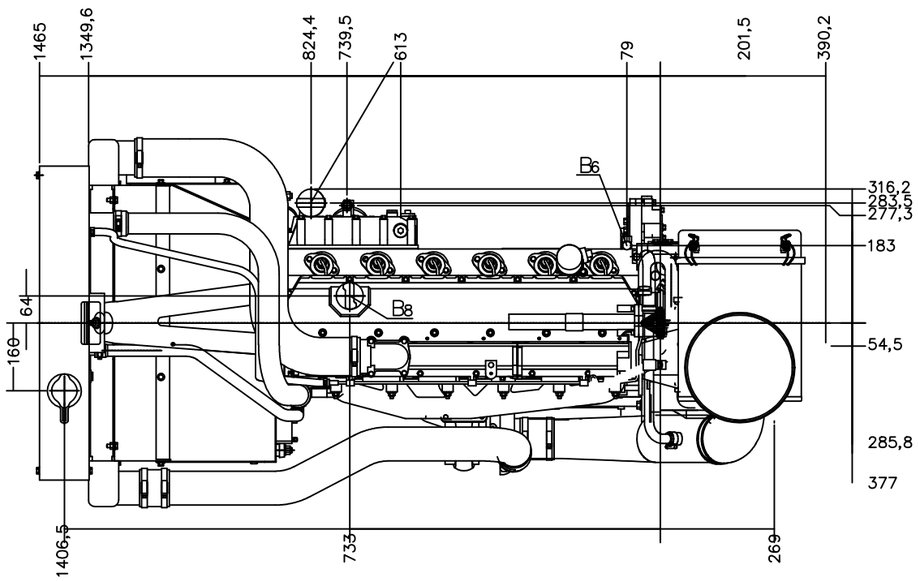


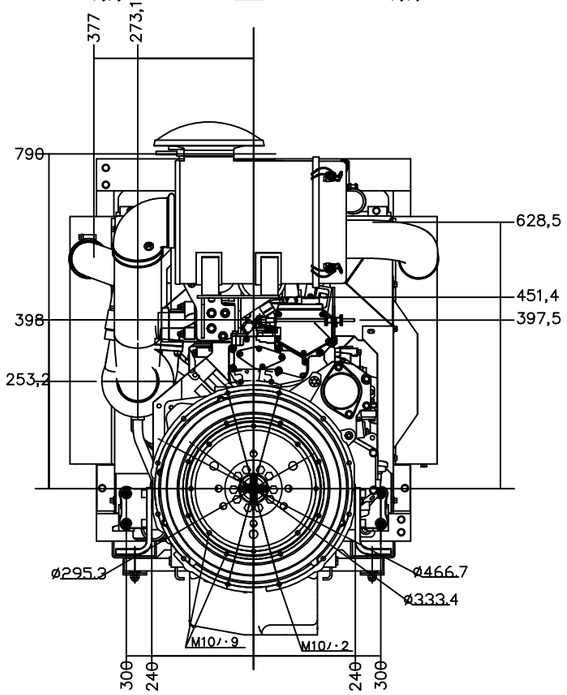


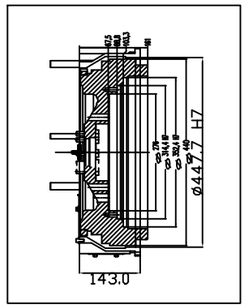


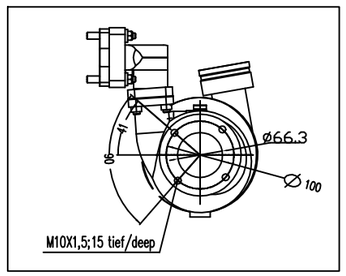


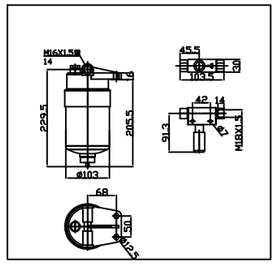


| | | | |
|---|---|---|---|
| Baurt TYPE | BF 6M 1013 EC | | Maßstab SCALE 1:5 |
| | | Datum/DATE | Name/NAME |
| | | 04.03.2007 | BROICH |
| | | 04.03.2007 | BROICH |
| | | | |
| | | | |
| | | |