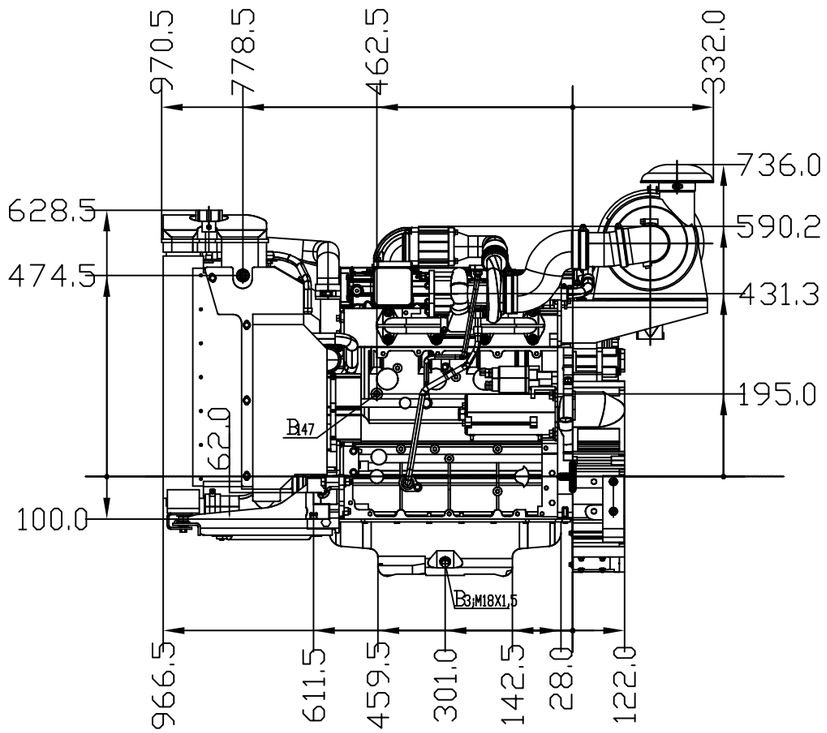

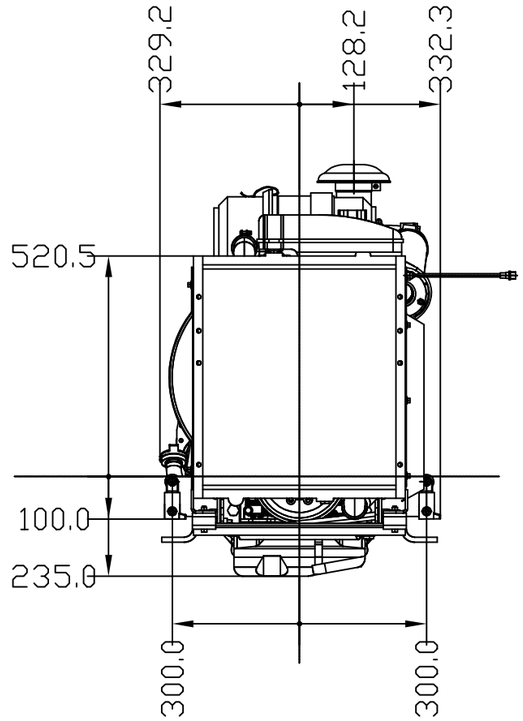

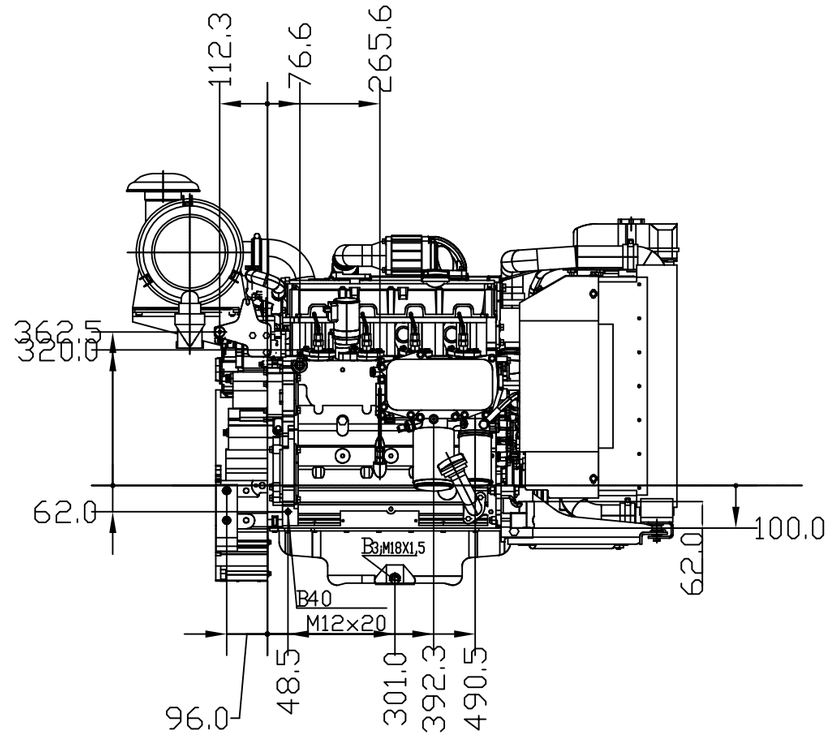

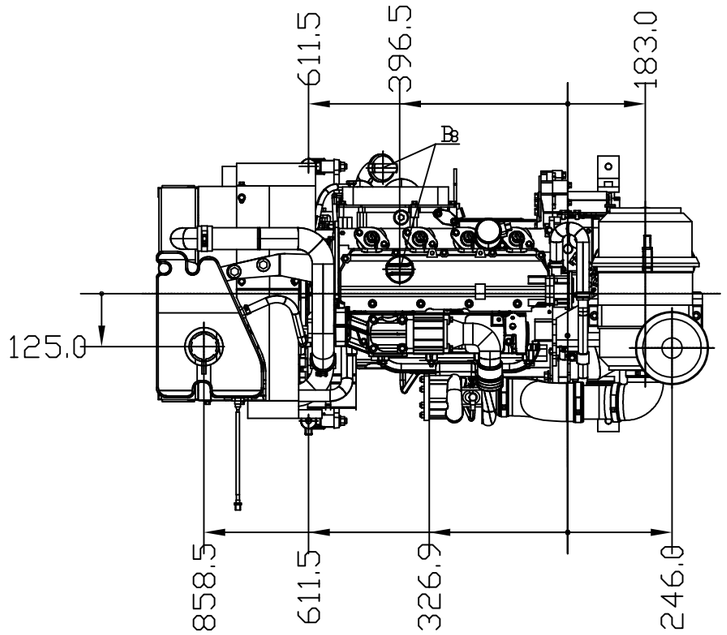

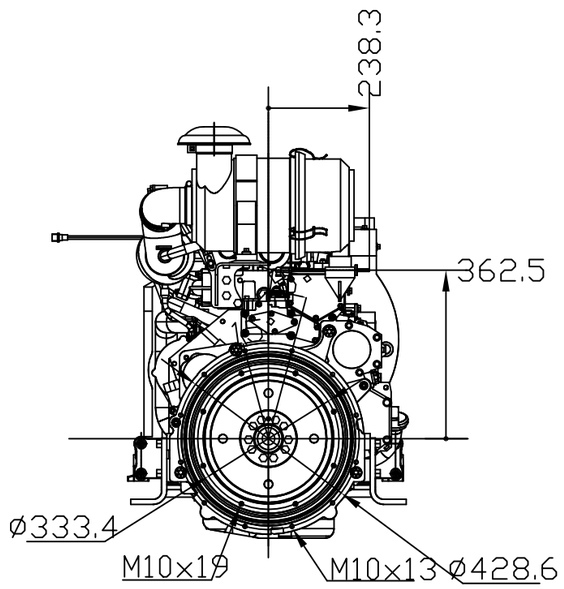

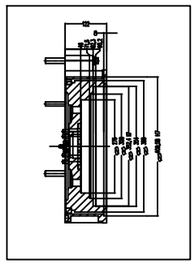

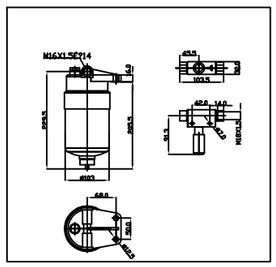

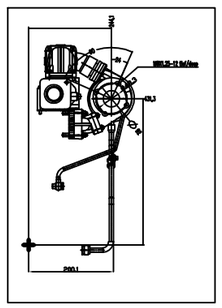

TYPE BF 4M 2012			SCALE 1:5
		Motorzeichnung / Engine Drawing	
		0029 0309	UA0128-97/00

MODIFICATION ONLY WITH CAD !

© 2003 DEUTZ AG